1 -Comp. Loc.: Transmission

1.1 5-spd transmission 01V

1 - Transmission control module -J217- ⇒ page 2

2 - Engine control module (ECM)

3 - Data Link Connector (DLC)
- ❑ In vehicles up to 09.00 ⇒ page 2
- ❑ In vehicles from 10.00 ⇒ page 2

4 - Transmission fluid temperature sensor -G93- ⇒ page 3

5 - Valve Body

6 - Multifunction transmission range switch -F125- ⇒ page 3

7 - Transmission input speed sensor -G182-
- ❑ Transmission Input Speed (RPM) Sensor with E17 ⇒ page 4
- ❑ Transmission Input Speed (RPM) Sensor with E18/2 ⇒ page 4

8 - Transmission vehicle speed sensor -G38- ⇒ page 3

8 - Transmission output speed sensor -G195- ⇒ page 3

9 - Tiptronic switch -F189- ⇒ page 5

10 - Shift lock solenoid -N110- ⇒ page 5

11 - Throttle position sensor - G69-

11 - Throttle position sensor -G79-

12 - Cruise control switch -E45-

13 - Starter interlock relay -J207-

14 - Transmission range display -Y6-

15 - Kick down switch -F8-
- ❑ Kick Down without EPC ⇒ page 5
- ❑ Kick Down with EPC ⇒ page 6

16 - Brake lamp switch -F-

16 - Brake pedal switch -F47-

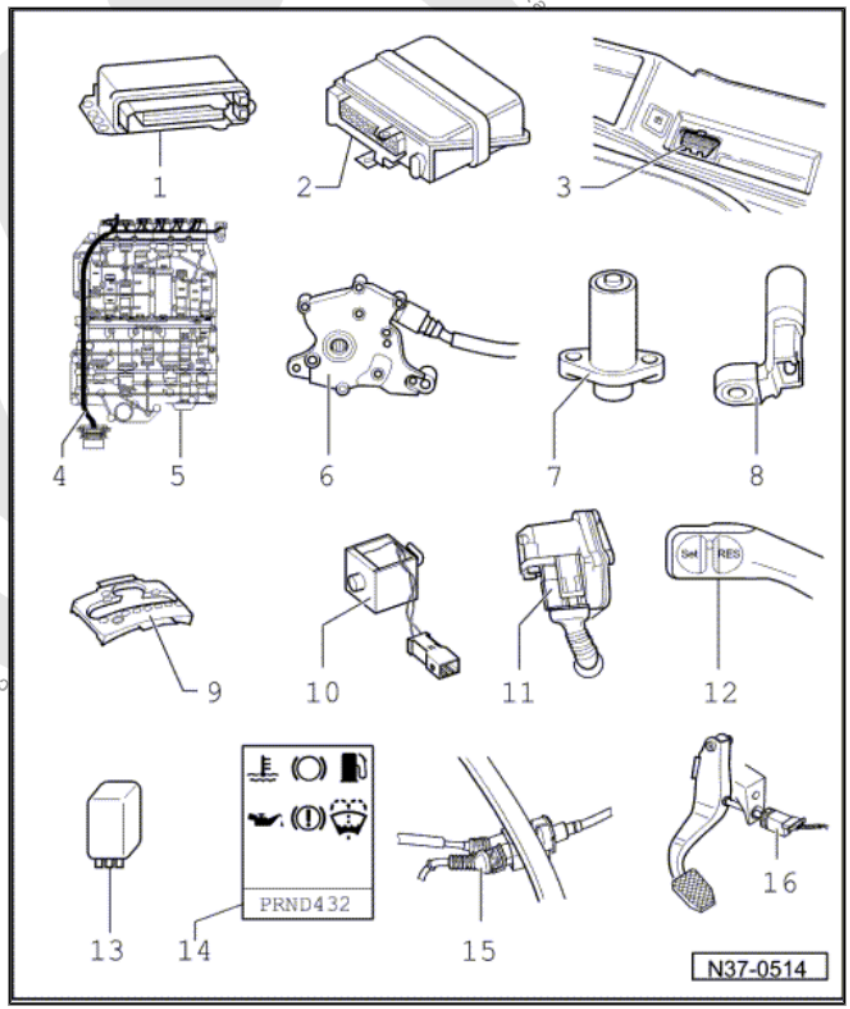

Copyright. Copying for private or commercial purposes, in part or in whole, is not permitted unless authorised by Volkswagen AG. Volkswagen AG does not guarantee or accept

Protected by copyright. Copying for private or commercial purposes, in part or in whole, is not permitted unless authorised by Volkswagen AG. Volkswagen AG does not guarantee or accept any liability with respect to the correctness of information in this document. Copyright by Volkswagen AG.

1.1.1 Transmission Control Module

- - Transmission control module -J217-

- - Control module is located in front of right seat, under carpet in footwell

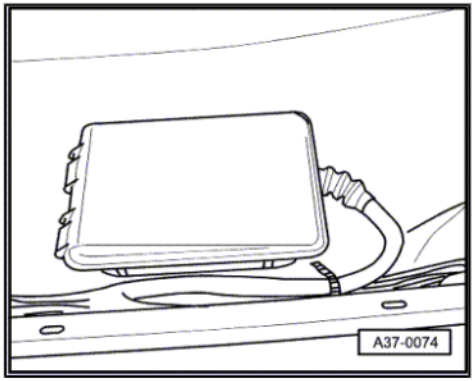

1.1.2 Data Link Connector (DLC), up to 09.00

- - Data Link Connector (DLC) is located in center console

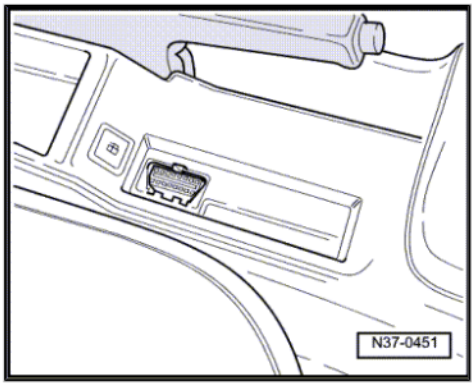

1.1.3 Data Link Connector (DLC) from 10.00

Arrow - The data link connector is located under the driver side storage compartment

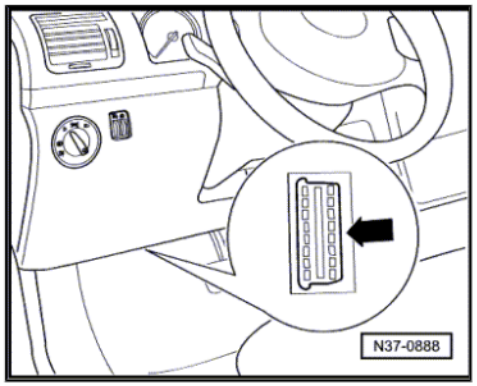

1.1.4 Transmission Fluid Temperature Sensor

Arrow - Transmission fluid temperature sensor -G93-

- - located in the wiring harness on valve body

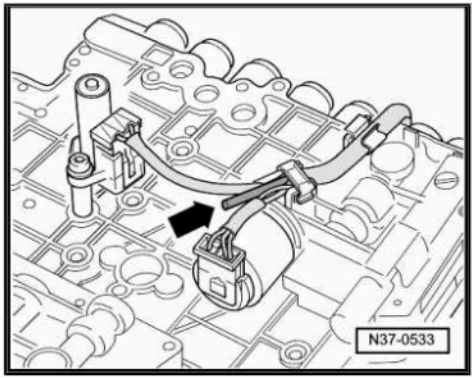

1.1.5 Vehicle Speed Sensor (VSS)

- - Transmission vehicle speed sensor -G38-
- - Transmission output speed sensor -G195-
- - Located in right rear of transmission

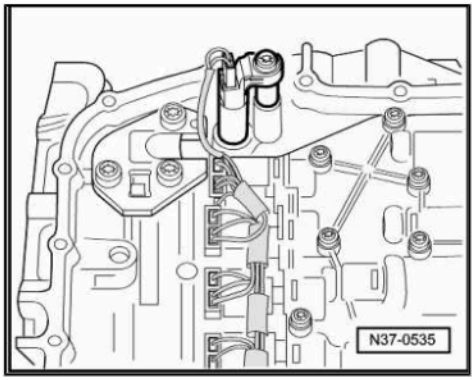

1.1.6 Multi-Function Transmission Range Switch

1 - Multifunction transmission range switch -F125-

- - Located at left on transmission

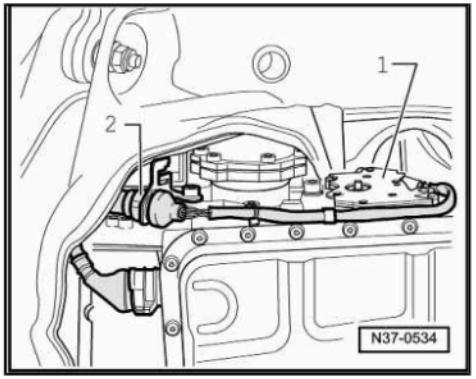

Protected by copyright. Copying for private or commercial purposes, in part or in whole, is not permitted unless authorised by Volkswagen AG. Volkswagen AG does not guarantee or accept any liability with respect to the correctness of information in this document. Copyright by Volkswagen AG.

1.1.7 Transmission Input Speed (RPM) Sensor with E17

- - Transmission input speed sensor -G182-

- - Located on the bottom side of the valve body on transmission with hydraulic control E17 (see illustration)

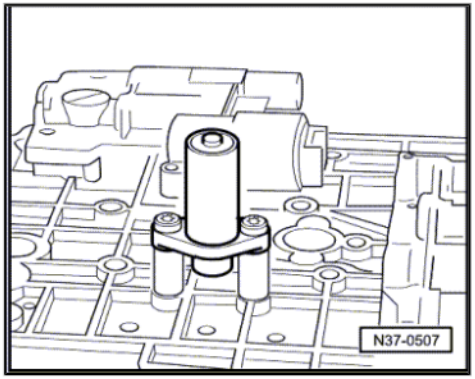

1.1.8 Transmission Input Speed (RPM) Sensor with E18/2

A - Transmission input speed sensor -G182-

- - Secured behind the valve body on the transmission housing with hydraulic control E18/2

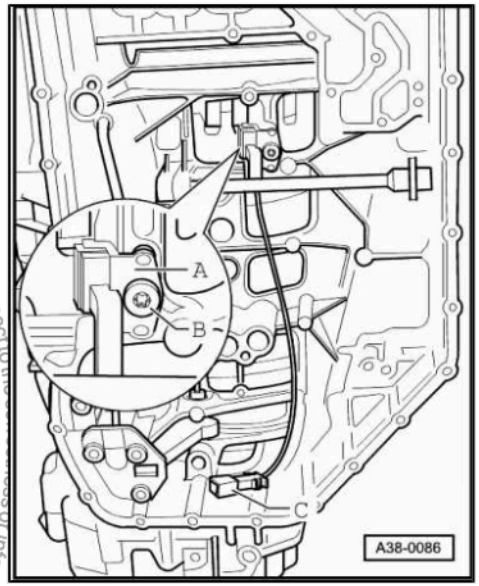

Protected by copyright. Copying for private or commercial purposes, in part or in whole, is not permitted unless authorised by Volkswagen AG. Volkswagen AG does not guarantee or accept any liability with respect to the correctness of information in this document. Copyright by Volkswagen AG.

1.1.9 Shift lock solenoid

- - Shift lock solenoid -N110-

- - Located in the shift mechanism housing

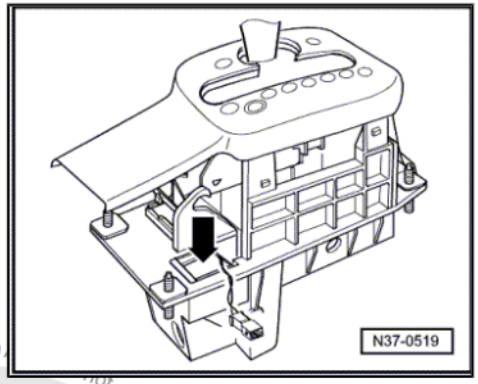

1.1.10 Tiptronic Switch

- - tiptronic switch -F189-

- - Located in shift mechanism cover

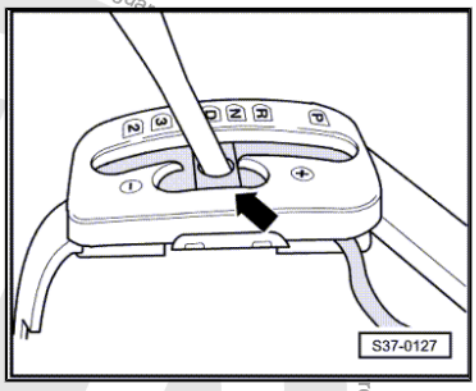

1.1.11 Kick Down Switch in vehicles without EPC

Aarrow - Kick down switch -F8-

- - Integrated in Accelerator Pedal (AP) cable and is located in front of front cross panel in engine compartment

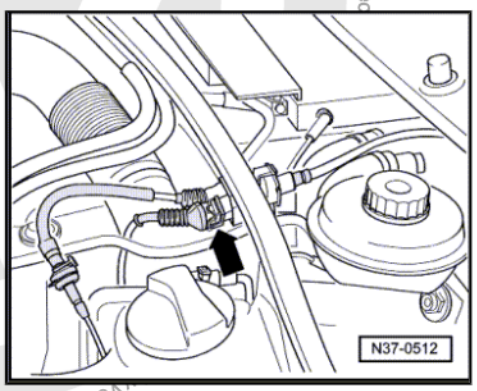

Protected by copyright. Copying for private or commercial purposes, in part or in whole, is not permitted unless authorised by Volkswagen AG. Volkswagen AG.

1.1.12 Kick Down Switch in vehicles with EPC

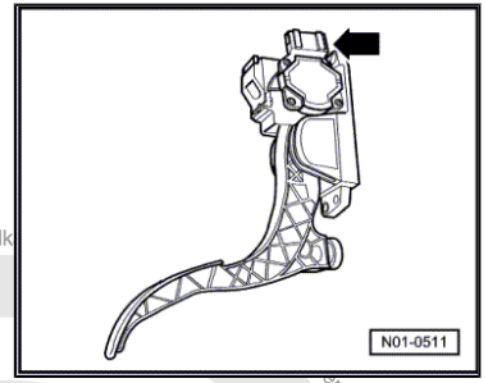

Arrow - Kick down switch -F8-

- - Integrated in the throttle position sensor

Protected by copyright. Copying for private or commercial purposes, in part or in whole, is not permitted unless authorised by Volkswagen AG. Volk
pt any liability with respect to the correctness of information in this document. Copyright by Volkswagen AG.